THE CORRUPTOR
RING MODULATOR

by F. Lyxzén
www.parasitstudio.se

Not for commersial use!

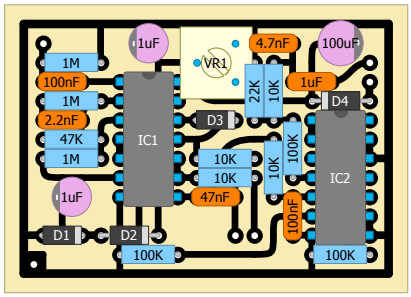

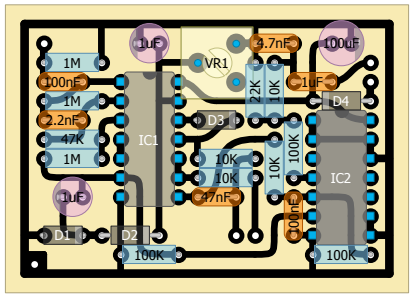

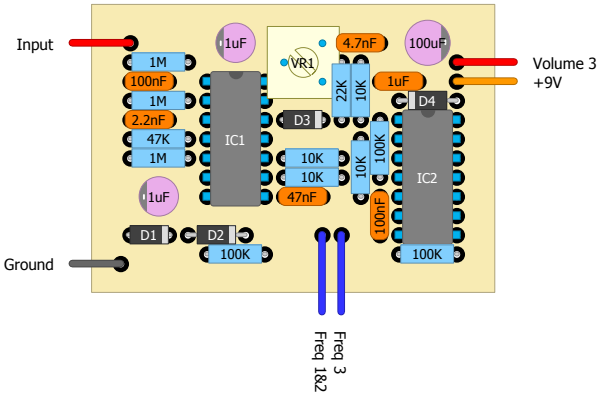

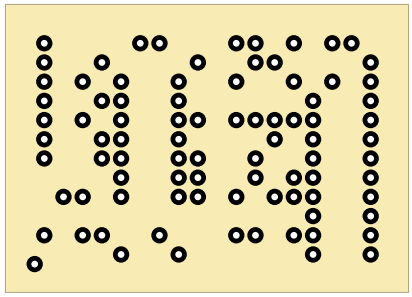

IC1: CD4069
IC2: CD4070
D1-D3: 1N4148
D4: 1N400*

Frequency: B50K
Volume: B100K
VR1 (gate release/sensitivity): 100K trimmer

SW lug 3 to ground
Volume 1 to ground
Volume 2 to output

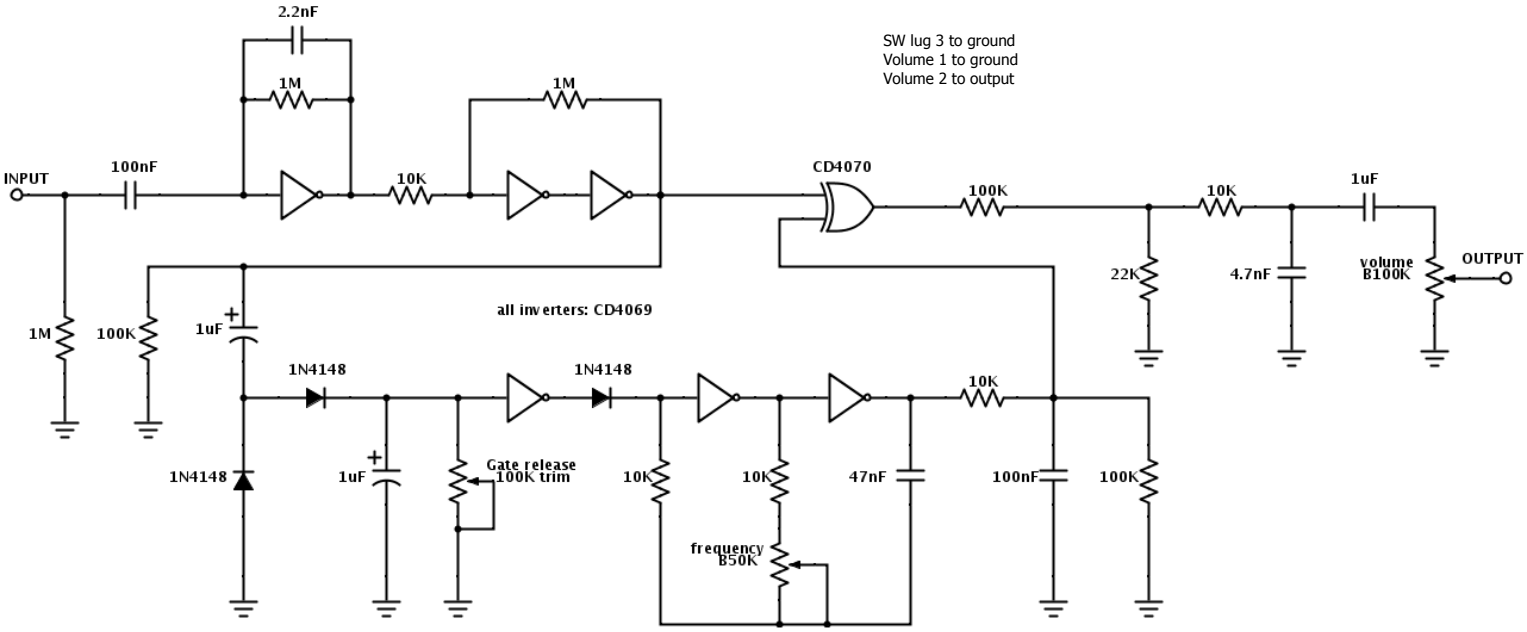
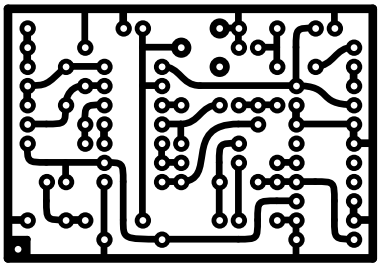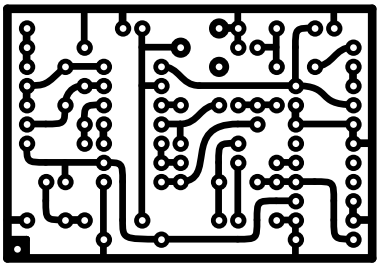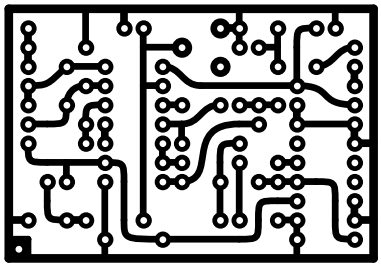
power connections, polarity protection, DC filtering and IC decoupling not shown