SILVER FOX OCTAVER

Not for commersial use!

by F. Lyxzén
www.parasitstudio.se

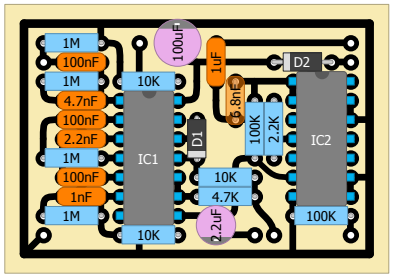

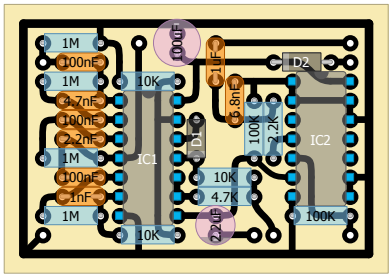

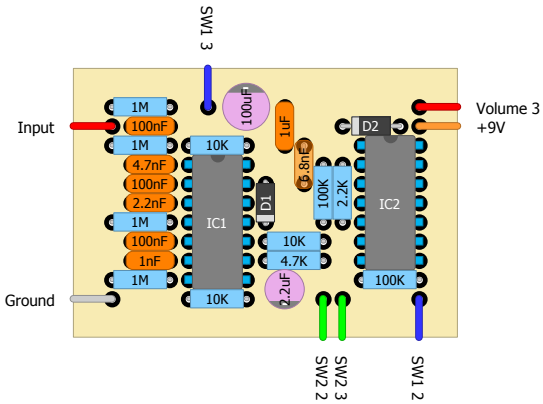

SW1 (octave up): SPDT (on/on)
SW2 (octave down): SPDT (on/on)
Volume: A100K

Volume 1 to ground
Volume 2 to output
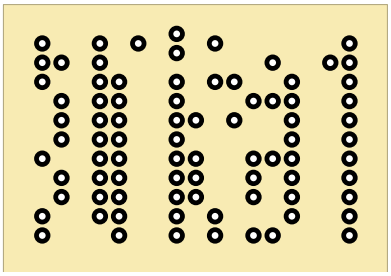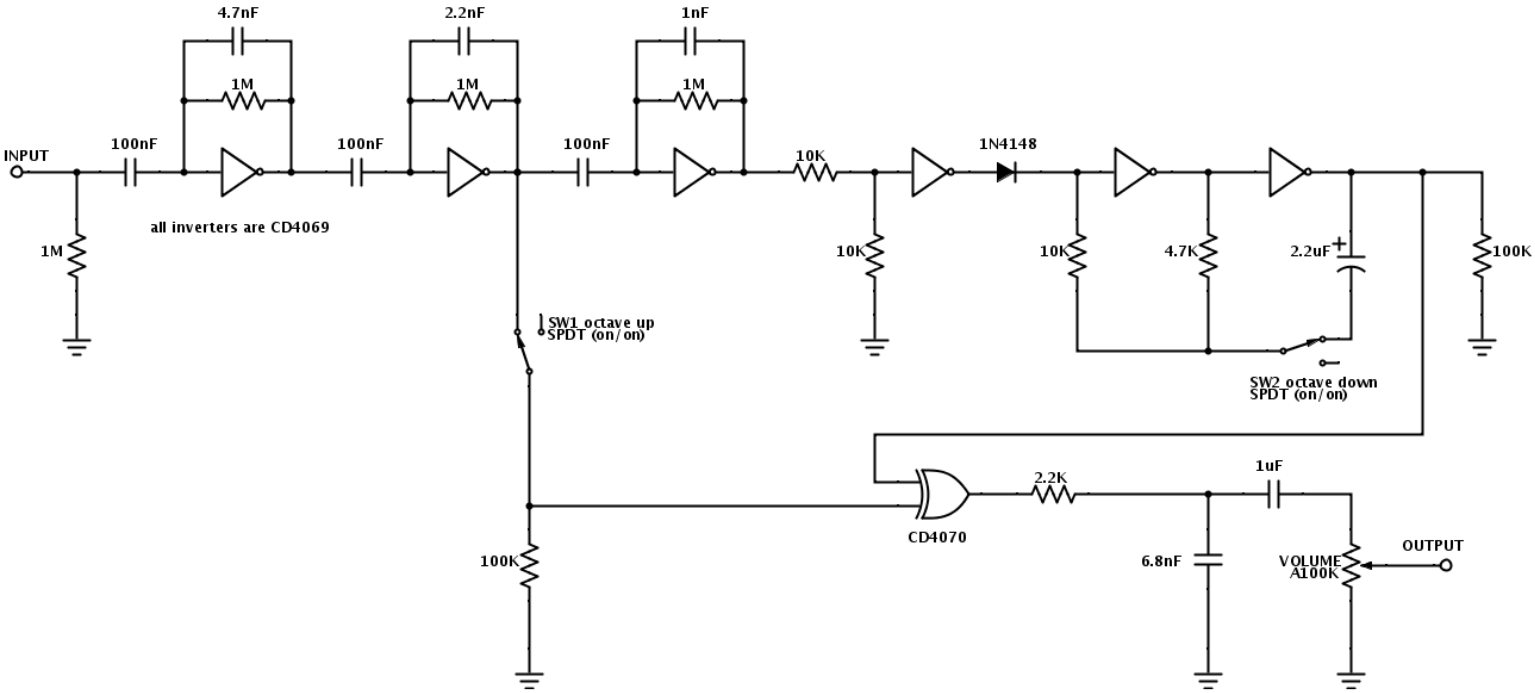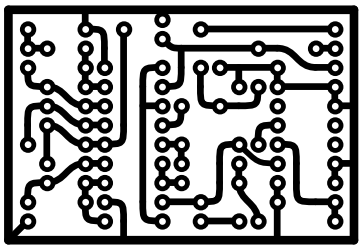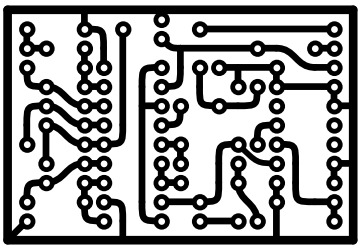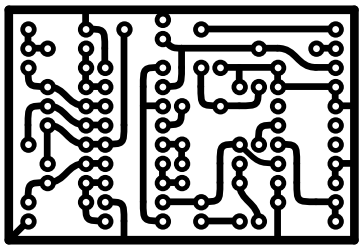
IC1: CD4069
IC2: CD4070
D1: 1N4148
D2: 1N400*