BLACK CURRENT vibrato & stutter

by F. Lyxzén - www.parasitstudio.se
Not for commersial use

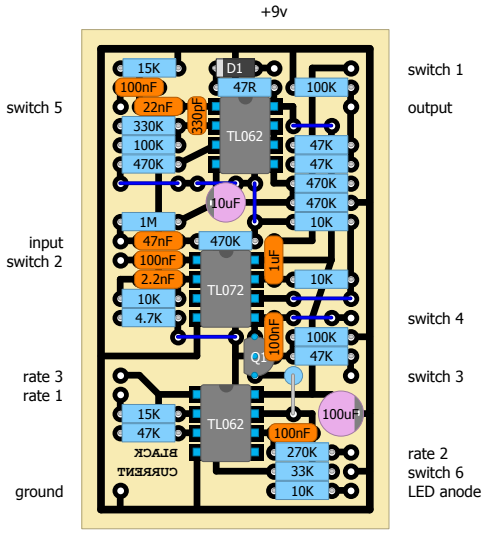

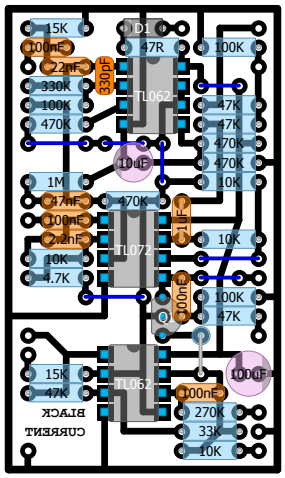

rate: B100K
vibe / Chop switch: DPDT on/on
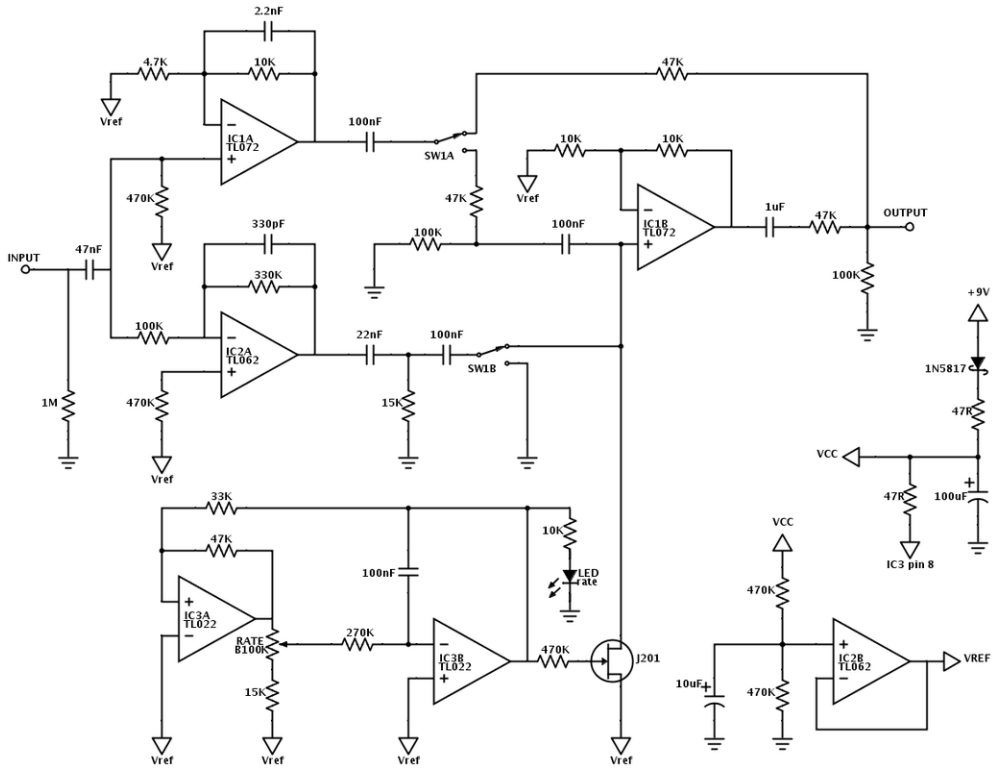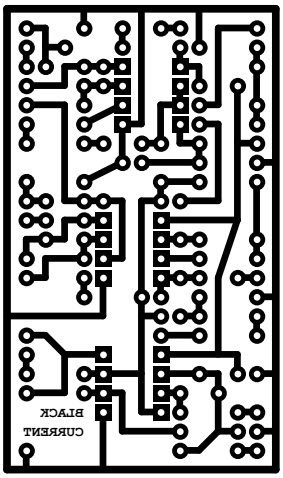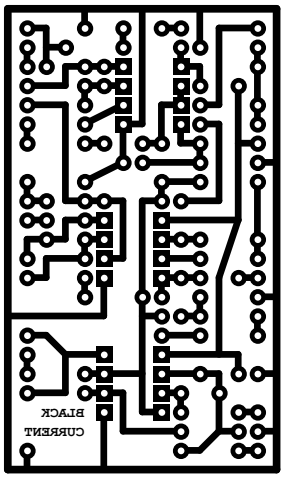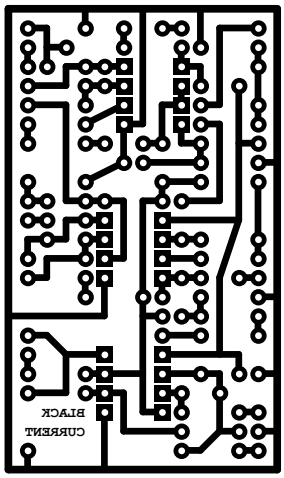
Q1: J201
D1: 1N5817
standing resistor: 470K